Electrolux PROFESSIONAL

Modular Cooking Range Line 900XP Electric Bain Marie Top Full module

ITEM #

MODEL #

NAME #

SIS #

AIA #



391125 (E9BMEHB000) Full module electric bain-marie top

Short Form Specification

Item No.

Incoloy armoured heating elements positioned under the base of the well. Used to keep cooked food at serving temperature using hot water inside the well. Water temperature to be controlled by thermostat with maximum temperature of 90 °C. Exterior panels of unit in stainless steel with Scotch Brite finish. Extra strength work top in heavy duty 2 mm stainless steel. Right-angled side edges to allow flush-fitting junction between units.

APPROVAL:

Main Features

- Bain Marie used for keeping cooked food at serving temperatures using hot water.
- Incoloy armoured heating elements positioned under the base of the well.
- Knob switch.
- Filling water level is plate-marked on the side of the well.
- Unit to feature manual refill of well.
- Water temperature controlled by thermostat with maximum temperature value of 90 °C.
- Basin drained by drain valve with overflow.
- Special insulation beneath cooking surface keeps heat on the plate without dispersion to the base.
- Unit to have perforated false bottom and runner support for GN containers.
- All major compartments located in front of unit for ease of maintenance.
- The special design of the control knob system guarantees against water infiltration.
- IPX5 water protection.
- Top configuration allows installation on ambient base only (not possible to install on refrigerated nor freezer base).
- Suitable for countertop installation.

Construction

- Unit is 930 mm deep to give a larger working surface area.
- All exterior panels in Stainless Steel with Scotch Brite finishing.
- AISI 304 stainless steel worktop, 2mm thick.
- Model has right-angled side edges to allow flush fitting joints between units, eliminating gaps and possible dirt traps.
- Water basin is seamlessly welded into the top of the appliance.

Optional Accessories

- Junction sealing kit PNC 206086 ❑
- Support for bridge type installation, 800mm PNC 206137 ❑
- Support for bridge type installation, 1000mm PNC 206138 ❑
- Support for bridge type installation, 1200mm PNC 206139 ❑
- Support for bridge type installation, 1400mm PNC 206140 ❑
- Support for bridge type installation, 1600mm PNC 206141 ❑

• Kit for automatic depressuring of the double jacket for 100/150 lt indirect and autoclave boiling pans	PNC 206279	❑
• Chimney upstand, 800mm	PNC 206304	❑
• Side handrail-right/left hand (900XP)	PNC 216044	❑
• Frontal handrail, 800mm	PNC 216047	❑
• Frontal handrail, 1200mm	PNC 216049	❑
• Frontal handrail, 1600mm	PNC 216050	❑
• Large handrail - portioning shelf, 800mm	PNC 216186	❑
• 2 side covering panels for top appliances	PNC 216278	❑
• Water filling tap for bain-marie top	PNC 921627	❑

The company reserves the right to make modifications to the products without prior notice. All information correct at time of printing.

Modular Cooking Range Line 900XP Electric Bain Marie Top Full module

Front

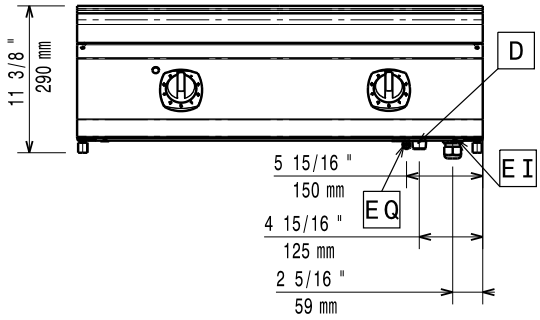

Side

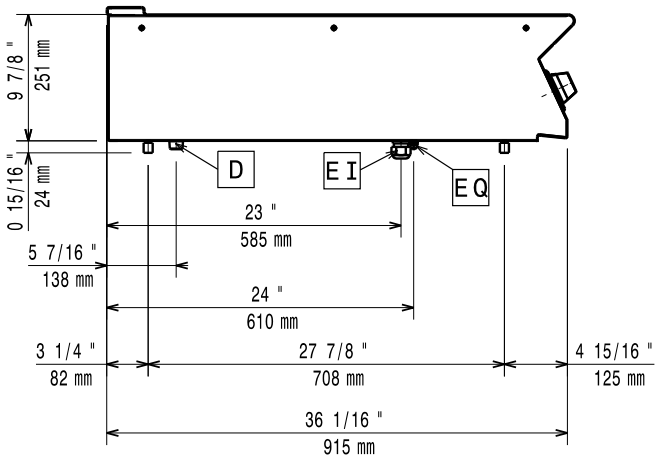

D = Drain
EI = Electrical inlet (power)
EQ = Equipotential screw

Top

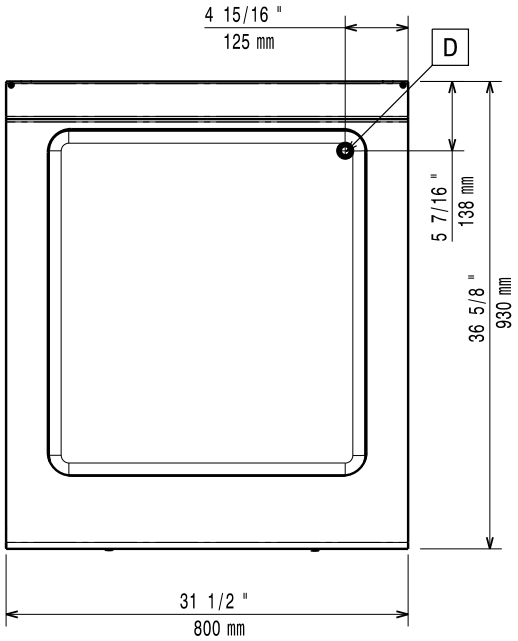

Electric

Supply voltage:	380-400 V/2N ph/50-60 Hz
Total Watts:	4.4 kW

Water:

Water Drain:	50 mm

Key Information:

Usable well dimensions (width):	630 mm
Usable well dimensions (height):	160 mm
Usable well dimensions (depth):	685 mm
Thermostat Range:	30 °C MIN; 90 °C MAX
Net weight:	45 kg
Shipping weight:	46 kg
Shipping height:	530 mm
Shipping width:	1010 mm
Shipping depth:	860 mm
Shipping volume:	0.46 m³
[NOT TRANSLATED]	EBM98

If appliance is set up or next to or against temperature sensitive furniture or similar, a safety gap of approximately 150 mm should be maintained or some form of heat insulation fitted.

The company reserves the right to make modifications to the products without prior notice. All information correct at time of printing.

2026.11.19